USED ON	NEXT HIGHER ASSEMBLY
-	-

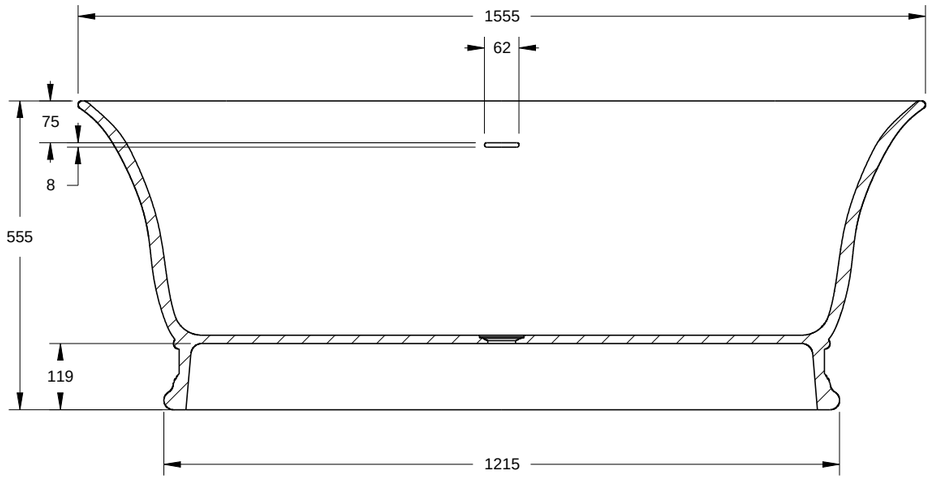

Section A-A

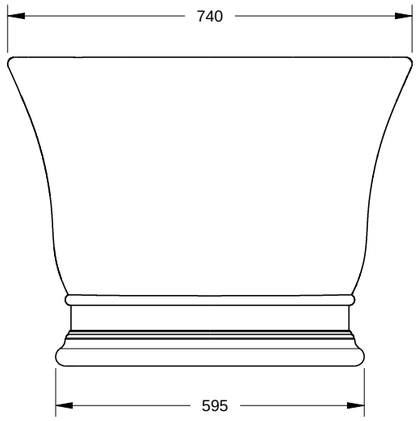

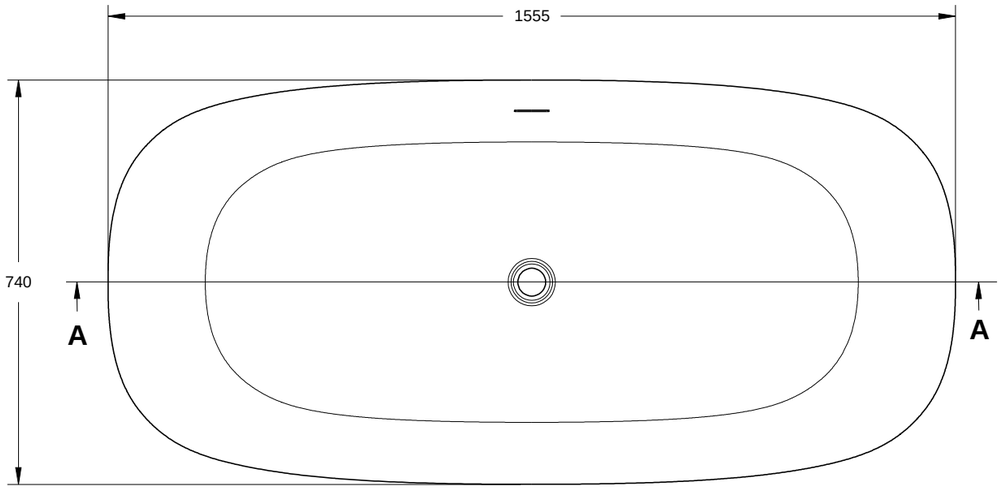

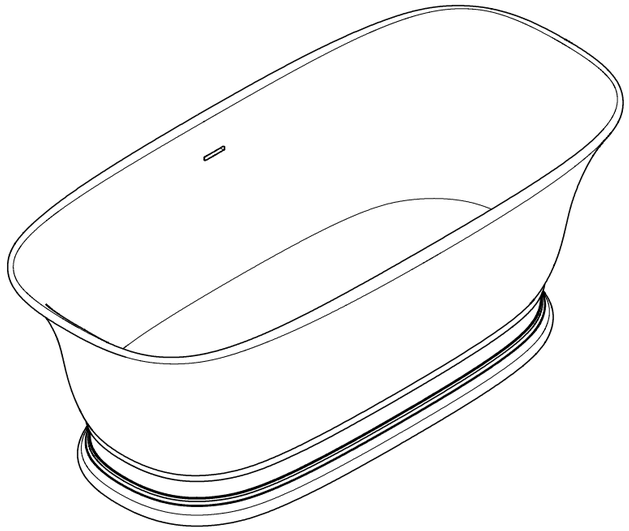

REV	DRAWN	DATE	PARTICULARS	ECP No

SCALE: 1:12 ON A3

DO NOT SCALE, USE DIMENSIONS.
ALL DIMENSIONS ARE IN mm

RESTRICTED

BOUTIQUE BATHS

FINAL APPR		
APPROVED		
APPROVED		
CHECKED		
DRAWN		

MATL: WEIGHT =104 kg

TITLE: Bampton Bath BAM001

SUB TITLE:

CAD No:

DRAWING No: 004-11-15

1/1

Rev: -